KNOWLEDGE

Chemistry Topic 5
Energy changes

ORGANISER

Section 1 Energy Changes Key Terms

Conservation of energy	Energy is **neither created or destroyed**, only **transferred from one store to another**
ΔH	**Change in energy** of a system in a reaction, its units are KJ/mol
Exothermic	A reaction that **transfers energy to the surroundings** so the **temperature of the surroundings increases**, e.g. **combustion** and **neutralisation** reactions. Used in **self-heating cans** and **hand warmers**. Has a negative value of ΔH
Endothermic	A reaction that **takes in energy from the surroundings** so the **temperature of the surroundings decreases**, e.g. **thermal decomposition**. Used in **sports injury packs. Has a positive value of** ΔH
Activation energy	The **energy needed** for **particles to successfully react**.

Section 2a Reaction profiles – Exothermic reaction

The products are at a **lower energy** than the reactants. This means that energy has been **transferred to the surroundings**. Hence the surroundings gets **hotter** and the temperature **rises**.

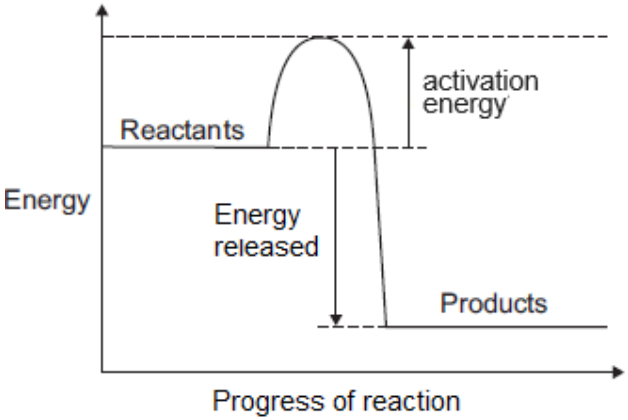

Section 2b Reaction profiles – Endothermic reaction

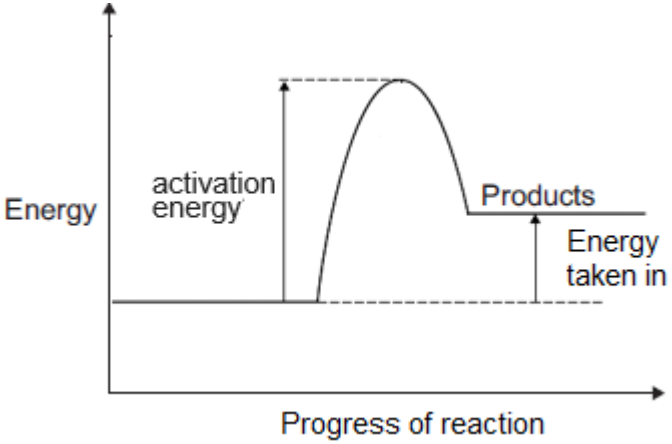

The products are at a **higher energy** than the reactants. This means that energy has been **transferred from the surroundings**. Hence the surroundings gets **colder** and the temperature **decreases**.

Section 3 Bond breaking and making (HT)

Breaking bonds	**Energy is needed** to break bonds (Endothermic).
Forming bonds	**Energy is released** when bonds are formed (Exothermic).

Hydrogen and oxygen react together to make water. The bonds between hydrogen and oxygen have to be broken so that new bonds can form between hydrogen and oxygen.

KNOWLEDGE

Chemistry Topic 5
Energy changes

ORGANISER

Section 4 Bond energy calculations (HT)

You can calculate the **overall energy change** in a chemical reaction **using bond energies**. *Bond energy data will be given to you in an exam, hence you don't need to revise the data.*

Equation:
Bond energy = energy required to break bonds in the reactants – energy required to make bonds in the products

1) Use bond energies to estimate the overall energy change for the reaction:

$$H_2 + Cl_2 \rightarrow 2HCl$$

H–H + Cl–Cl → H–Cl + H-Cl
Bonds broken - Bonds made
1 H – H 436 2H – Cl 2x432
1 Cl – Cl 243
+ 436 + 243 – (2 x 432)
679 – 864
ΔH = -185 KJ/mol

Figure 1

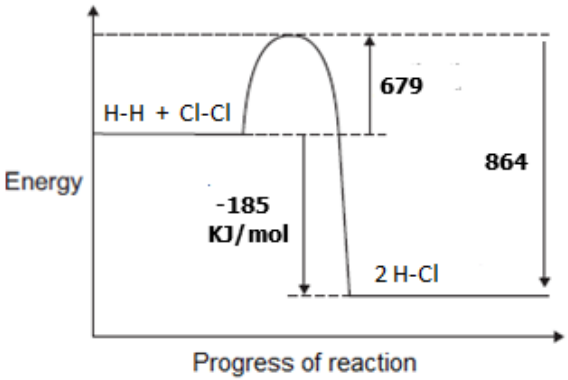

Figure 1 shows the **energy profile diagram** for the reaction between hydrogen and chlorine.

679 KJ/mol of energy was **taken in** when the **reactants bonds** where **broken**, 864 KJ/mol of energy was **released** when the **products bonds** where **formed**, hence the **overall energy of the reaction was -185 KJ/mol.**

Because the energy change ΔH is **negative**, energy was **transferred to the surroundings** in an **exothermic** reaction.

Common Bond energies KJ/mol	
C-C	347
C-O	358
C-H	413
C-N	286
C-Cl	346
Cl-Cl	243
H-Cl	432
H-O	464
H-N	391
H-H	436
O=O	498
N≡N	945

KNOWLEDGE

Chemistry Topic 5 Energy changes (Triple)

ORGANISER

Section 5a Chemical cells and batteries Key points (Triple)

Metals	Metals tend to **lose electrons** and form **positive ions.** The **greater the tendency to lose electrons,** the **more reactive** the metal.
Electrical cell	When two metals are dipped in a salt solution and joined by a wire, the **more reactive metal donates electrons** to the less reactive metal forming a simple electrical cell.
Cells with high Voltage	The **greater the difference in reactivity** between the two metals, the **higher the voltage** produced by the electrical cell.
Battery	A battery is made up of two or more cells joined together to increase the voltage produced.
Electric current	Electric current is the flow of electrons

Section 5b Using Voltage readings in simple cells to predict reactivity.

A simple experiment investigating the voltage produced by different metals paired with other metals can give you a measure of reactivity.

Electrode A	Electrode B	Voltage in V
Copper	Copper	0.00
Copper	Iron	0.78
Copper	Magnesium	2.71
Copper	Tin	0.48

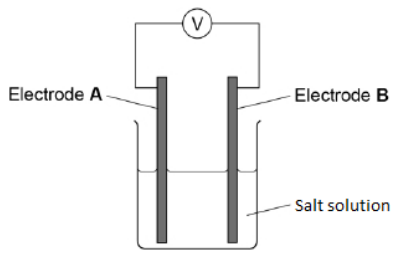

The results from the experiment can be used to list the metals in **order of reactivity**. The **greater the voltage the more reactive** the metal in electrode B is compared to copper. Hence these results show that the order of reactivity from **least to most reactive** is: **Copper, tin, iron and magnesium.**

Section 5c Batteries

Primary Cells	Cannot be recharged. The dry cells with electrodes made of zinc and carbon are non-rechargeable. Once one of the reactants runs out the cell stops working and should be disposed of in a recycling centre.
Secondary Cells	Are rechargeable, in the recharging process the battery is connected to a power supply that reverses the reactions that occur at each electrode, regenerating the original reactants.

Section 6 Fuel Cells (Triple)

Hydrogen-powered vehicles	Hydrogen can be burned in combustion engines. $2H_2 + O_2 \rightarrow 2H_2O$

Advantages	Disadvantages
• Burns well and produces no pollutants. • Could reduce human impact on global warming as no CO_2 produced	• Safety and storage • Supply of hydrogen is an issue as it is made using electrolysis which requires electricity from non-renewable fuels. Hence CO_2 is being released into the atmosphere.

More efficient fuel cells

These cells are fed with hydrogen and oxygen and produce water. The energy released is transferred to electrical energy which powers the vehicle.
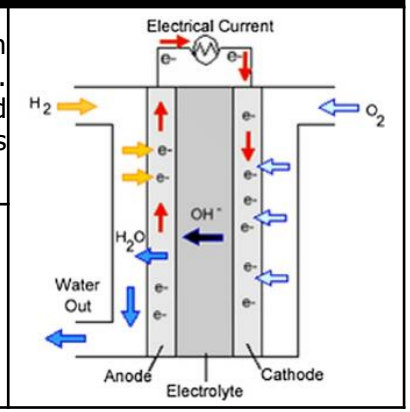
At the negative electrode
$2H_2 + 4OH^- \rightarrow 4H_2O + 4e^-$
At the positive electrode
$O_2 + 2H_2O + 4e^- \rightarrow 4OH^-$
Overall equation
$\mathbf{2H_2 + O_2 \rightarrow 2H_2O}$